Alwar

WALL LIGHT

Product Name	Alwar Outdoor Concrete Wall Light

Class II AC220-240V	IP Rating 65	Material Concrete Body	Install Person/s 1x

CAUTION – This product must be installed by a qualified installer
Please read instruction manual carefully before installing luminaire

Surge Protection
For comprehensive protection of a luminaire against electrical surges, surge protection shall be installed on the mains supply where required to protect luminaires and drivers from transient voltage damage.

For warranty information visit https://arrco.ae/terms-of-sale/

Please read these installation instructions carefully before installing this product. This product must be installed and maintained by a suitably qualified person/s in compliance with the latest applicable regulations and relevant legislation. SYV does not warrant any claim based on defects or damage caused by misuse, improper installation, improper operation and/or modifications carried out by the purchaser or third parties. This product shall not be used as a 'working light' during construction. This will result in the warranty of the product to be void.

Dimensions

Product Code	L	W	H
SKU 18450	95	120	190

All units are in millimetres.

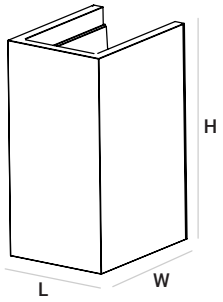

Installation

Figure 1

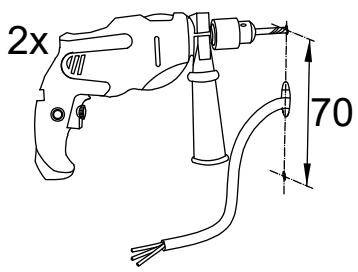

Figure 2

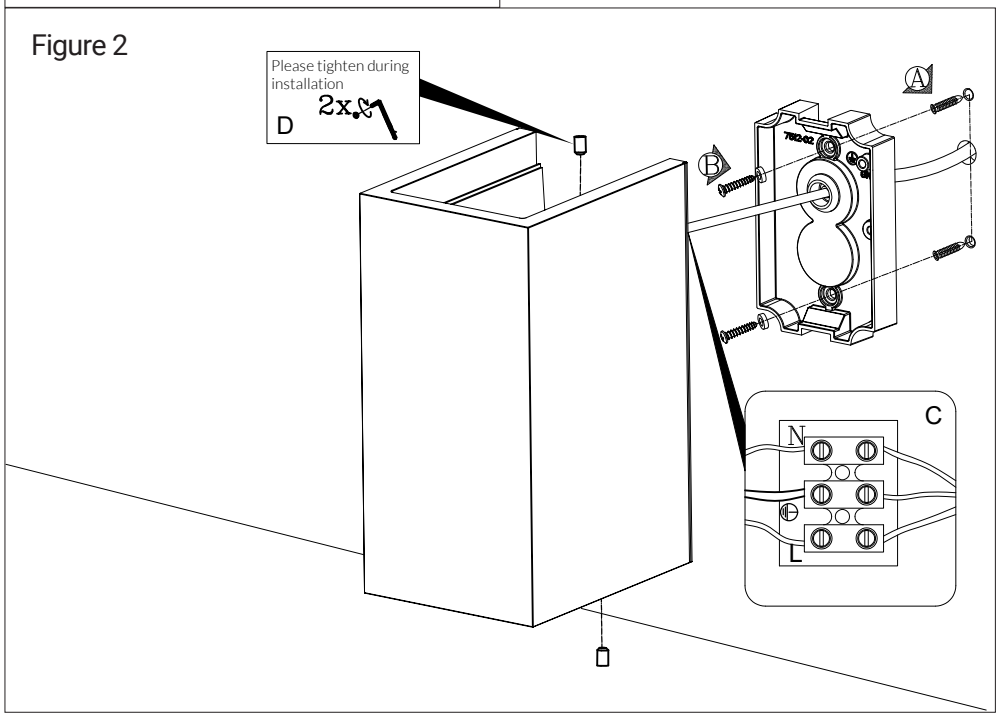

Cleaning

Warning: Before cleaning, disconnect from mains supply and allow luminaire to cool.

Disposal

Ensure correct disposal of this product (waste electrical and electronic equipment).

Corrosion Protection

It is important to note that care must be taken during installation or maintenance to ensure that the surface of the luminaire is not damaged. Any damage, which is exposed to moisture will result in corrosion occurring.

Please also note that any chemical applications on the luminaire or chemical contact via installation will cause corrosion of the surface of the luminaire and will void the warranty.

Safety Tips

- Always ensure the power is OFF and the fitting has cooled down before performing any maintenance, cleaning, changing the globe or making any adjustment to the fitting.
- To avoid injury or damage to the fitting, ensure that power leads and screws are secure before connecting the power.
- The fitting must not be used if the protective shield has been cracked. Replace any cracked protective shield.
- Ensure that the fitting does not come in contact with corrosive chemicals etc.
- To clean, wipe with a damp clean cloth. Never soak the fitting with water.
- Do not disassemble or remold the product at will to avoid accident of electric shock or light falling.
- Luminaire must be connected to a wiring system with an equipment-grounding conductor.
- Make sure the supply voltage is the same as the rated luminaire voltage.
- Avoid to use in environments containing sulfur, chlorine, or other halides, methyl acetate or ethyl acetate, cyanoacrylates, glycol ethers, formaldehyde or butadiene.

Warranty

- This light fitting is covered by 5 years warranty.
- If the fitting is not installed by a licensed electrician the warranty will be void.
- Please retain proof of purchase and evidence of installation by a licensed electrician for any warranty claims.
- Warranty will be void if there is any damage due to improper usage or modification to the fitting.
- Failure to comply with the instructions in this manual may increase the risk of damage or injury and will void the warranty.