solana

Taresa
19103

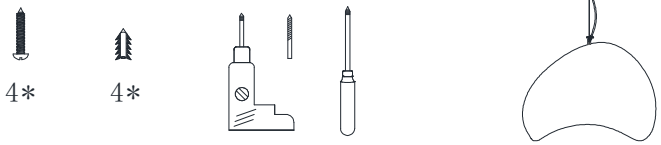

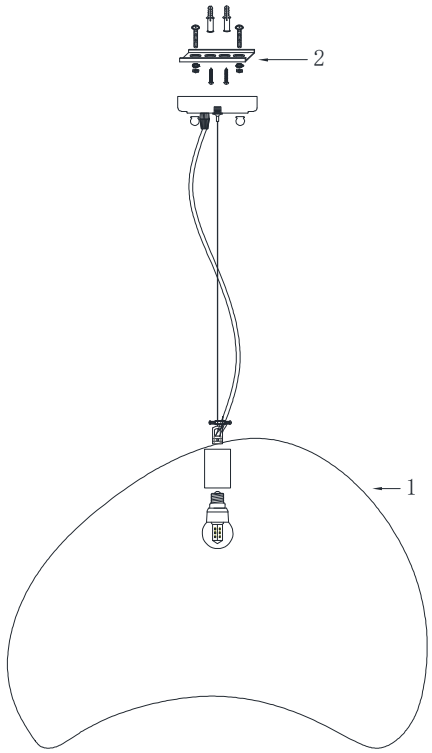

Serial number	1	2	3	4	5	6	7	8	9	10	11	12	13	14	15	16	17
number	1PCS	1PCS															

Please read clear the follow safety explain before you installation

0. Notice!Before you install the lamp,pis switoh off electrical source or take the switch be turn off.
1. Anybody install the lamp,must have the certificate of electrician make by Country grade.
2. All the lamp must install on the no electric surface.
3. All the lamp must install in the dry and rainproofroom.
4. The temperature for using the lamp is lower than 30 C
5. Please confirm your furniture s surface endurance temperature can or not Reach 90 C,if it s endurance temperature is less 90 C,pls keep space more Than 50cm from the lamp
6. Please check the wire on the wall before you stiletto,avoid to shatter the Connection or induce the danger on people.
7. Allthe wire meet in the transformer can t soldering tin,pls use junction box.
8. Please confirm the junction is deep-set and osculation is good.
9. After change the bulb,pls switch off electrical source or turn off at first,and Do it when the bulb is cool.
10. After change the bulb.pls change the bulb can or not turn on,if it s whorl bulb pls go round and tight the bulb when after light on 20 minute
11. Please use the similar power and kinds bulb.
12. Please not take anything what is not the incident garnish for the lamp.
13. After the lamp turn on must get hot,if you want to touch it pls wait when it be cool.
14. Please notice the least space from another things.
15. Avoid short circuit and over loading.
16. We not exchange a purchase the transformer when it is because over loading or other reason make it short circuit or burn.
17. Please notice the voltage receipt for transformer is 110V or 220V.
18. Please use dry bject to clear the lamp surface avoid get on electric shock.
19. When you found the glass shade have burst,you should get down the shade avoid down fall,and contact with the provider to change another one.