Estela
Recessed Downlight

White Reflector
(Optional Accessory)

Features

- Best Lumen output efficacy
- Use of high-tech spraying technology, anti-corrosion
- Die cast aluminium body and heat sink designed for effective heat dissipation
- High Light Uniformity
- High value appeareance and durability
- 2.5kV Protection
- 90% Energy Saving

Recessed

UGR <19

IP Rating
IP65

6 years warranty **Standard Warranty**

SYV Iluminacion Europea, Sociedad Limitada
Avda San Pablo 28 - 28820,
Cosloda (Madrid) Spain

© 2024 SYV

Estela

TECHNICAL DATA SHEET - ESTELA - 19186 - RECESSED DOWNLIGHT

TECHNICAL DATA

Product Data	Recessed Downlight
Lamp Type	BRIDGELUX LED
Wattage	10W
Color Temperature	3000K/4000K/6000K
Rated Luminaire Luminous Flux	850lm/900lm/950lm
Rated Luminaire Efficiency	85~95lm/W
IP Rating	65
Beam Angle	55°
Input Voltage	AC220-240V
Output Voltage	25-40V
Frequency Range	50-60 Hz
CRI	Ra>90
Power Factor	>0.5
Output Current	250mA
Safety Class	Class II
Operating Temperature	-20°C ~ +40°C
SDCM(MacAdam)	< 3
Material	Aluminum body
Finish	White+Mirror Silver
Life Span	60,000 Hours
Warranty	6 Years
Applications	Residential, Commercial, Hospitality etc.

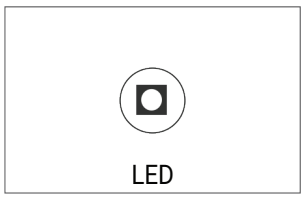

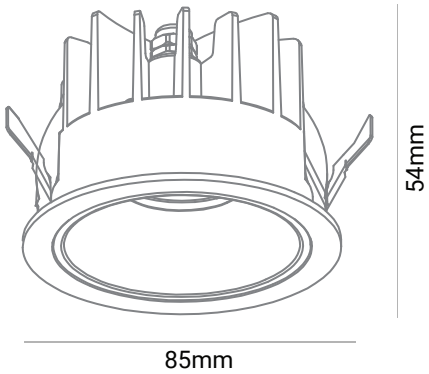

Cutout: 75mm

TECHNICAL OPTIONS

Wattage	15W / 25W / 35W / 40W / 50W
Color Temperature	3000K-6000K
Beam Angle	15°/24°/36°
Control	Switchable/DALI/1-10V/0-10V/TRIAC

SYV Iluminacion Europea, Sociedad Limitada
Avda San Pablo 28 - Naves 15 y 2 - 28820
Cosloda (Madrid) Spain
SYV Design is constantly developing and improving it's products. The right is reserved to change specification without prior notification or public announcement.